REVISIONS				
ZONE	REV.	DESCRIPTION	DATE	APPROVED
	A	REMOVED STRAIN RELIEF AND CONDUIT, AND COMBINED MANIFOLD ASSY	3/27/2014	RC/CO
	B	CORRECTED PART NO AND DESCRIPTION AND REMOVED MN1002	4/28/2014	RC/CO

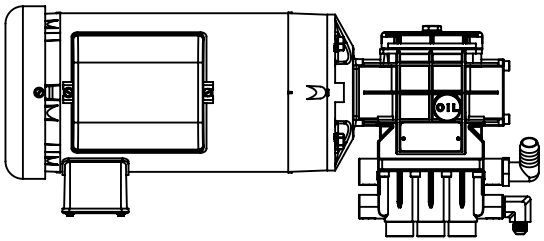

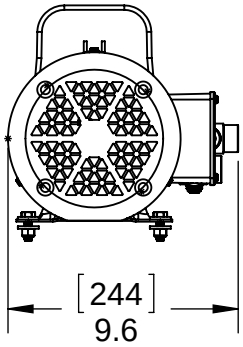

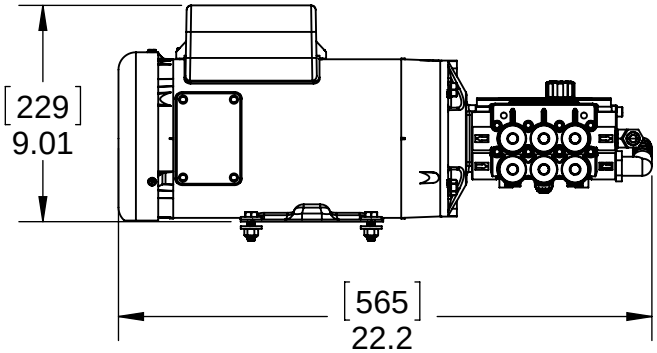

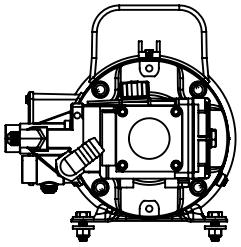

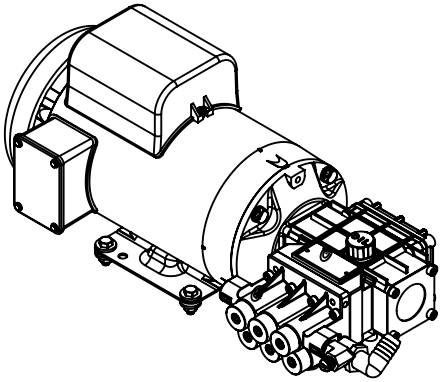

NOTICE OF CONFIDENTIALITY

THE INFORMATION CONTAINED IN THIS DRAWING IS THE SOLE PROPERTY OF BLUE WATER DESALINATION LLC. ANY REPRODUCTION, CIRCULATION, AND DISTRIBUTION IN PART OR AS A WHOLE WITHOUT THE WRITTEN CONSENT OF BLUE WATER DESEALINATION LLC IS STRICTLY PROHIBITED.

MATERIAL: VARIOUS

FINISH:

DO NOT SCALE DRAWING

TOLERANCES
UNLESS OTHERWISE SPECIFIED:

DIMENSIONS ARE IN INCHES AND MILLIMETER

FRACTIONAL:	± 1/16"	± 1.5mm
ANGULAR:	± 1 DEG	
.X	± 0.1"	± 2.5mm
.XX	± .001"	± 0.50mm
.XXX	± .005"	± 0.127mm

APPROVALS		DATE
DRAWN	R. CUDIAMAT	4/28/2014
CHECK	C. OKADA	4/28/2014
MFG	ENG	4/28/2014
QUAL	Q ENG	4/28/2014
CHIEF	CH ENG	4/28/2014

Blue Water DESALINATION
1930 E. CARSON ST, SUITE 103
CARSON, CA, 90810
TEL: 1 (855) 55 DESAL
FAX: 1 (310) 684 - 1474
www.BlueWaterDesalination.com

TITLE: PMP-MTR, ASSY, HP, 1PH, 4.2 GPM

SIZE	DRAWING NUMBER	REV
D	PM3309	B

SCALE: | WEIGHT: | SHEET 1 OF 2